ULM200 Complete Kit	Series	ULM200 Cover Sheet ULM200

8” Wide MultiV Ductile Iron Edge Concrete Trench Drain Kit 6 - 99 Foot Complete

New Commercial Trench Drain / Driveway Drain
8 Inch Wide - E Class Ductile Iron Grates Standard

Complete System - Each Kit Includes:

Specified number of 1 meter sections of trench drain
Specified number of ductile iron slotted grates with Lock Bars and Bolts
1 - Solid End Caps and 1 - 8” End Outlet

Key advantages of the ULM200 Polymer Concrete Kits:

- Polymer Concrete Channels
- Load Classes up to E Class
- Ductile Iron Edge
- External Width 9.3”
- Internal Width 7.9”
- Heights Between 6.7” - 14.6”

ULMA
ARCHITECTURAL SOLUTIONS

Number	Series
ULM200	**MULTIV 200**

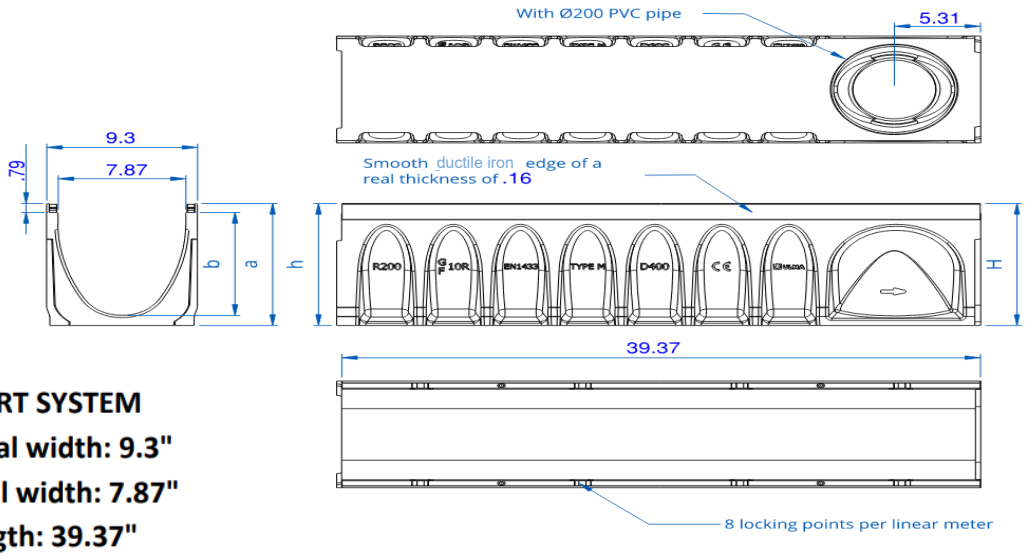

SPORT SYSTEM

External width: 9.3"

Internal width: 7.87"

Length: 39.37"

	Total Height (in)		Internal Height (in)			Outlet	
Channel Reference	h	H	A	B	Hydraulic Section	Vertical	Horizontal
R200MFG000R	6.7	6.7	5.04	5.04	31.6	7.87	—
R200MFG00R	8.66	8.66	7.01	7.01	44.02	7.87	—
R200MFG01	8.66	8.86	7.01	7.2	45.65	7.87	—
R200MFG02	8.86	9.06	7.2	7.4	46.97	7.87	—
R200MFG03	9.06	9.25	7.4	7.6	48.21	7.87	—
R200MFG04	9.25	9.45	7.6	7.8	49.5	7.87	—
R200MFG05	9.45	9.65	7.8	8	50.7	7.87	—
R200MFG06	9.65	9.84	8	8.2	52	7.87	—
R200MFG07	9.84	10.04	8.2	8.4	53.24	7.87	—
R200MFG08	10.04	10.24	8.4	8.6	54.5	7.87	—
R200MFG09	10.24	10.43	8.6	8.8	55.8	7.87	—
R200MFG10	10.43	10.63	8.8	9	57.04	7.87	—
R200MFG10R	10.63	10.63	9	9	57.04	7.87	—

Manufacturer

ULMA
ARCHITECTURAL SOLUTIONS

Specification

ULMA ULM200 Polymer Concrete linear drainage channel
DUCTILE IRON STEEL EDGE
Load Class up to D400, EN 1433 Standard
Vertically and Horizontally channel aligning tongue and groove joints

DISCLAIMER - The customer and the customer's architects, engineers, consultants, and other professionals are completely responsible for the selection installation and maintenance of any product purchased from Trench Drain Supply and/or its manufacturers. TRENCH DRAIN SUPPLY MAKES NO WARRANTY, EXPRESS OR IMPLIED, AS TO THE SUITABILITY, DESIGN, MERCHANTIBILITY, OR FITNESS OF THE PRODUCT FOR CUSTOMERS APPLICATION. The drawing and information provided remain the property and copyright of the manufacturer listed. The manufacturer reserves the right to modify specification without notice.

Number	Series
ULM200	**MULTIV 200**

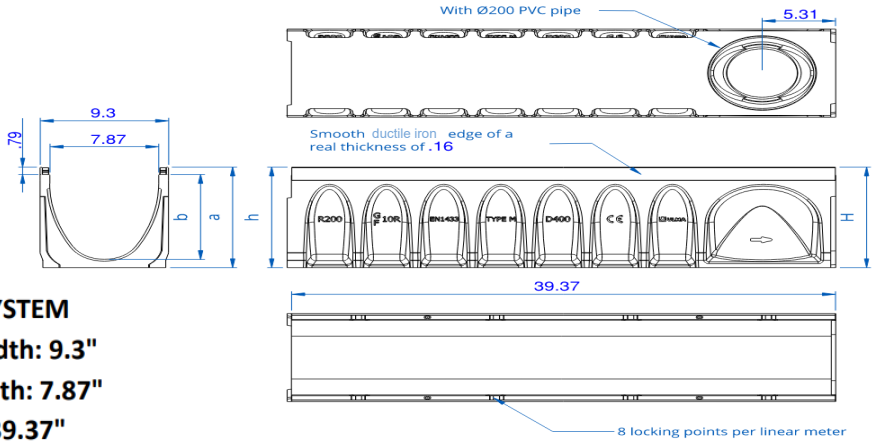

SPORT SYSTEM
External width: 9.3"
Internal width: 7.87"
Length: 39.37"

	Total Height (in)		Internal Height			Outlet	
Channel Reference	**h**	**H**	**A**	**B**	**Hydraulic Section in. sq.**	**Vertical**	**Horizontal**
R200MFG11	10.63	10.83	9	9.2	60.22	7.87	—
R200MFG12	10.83	11.02	9.2	9.4	61.38	7.87	—
R200MFG13	11.02	11.22	9.4	9.6	62.62	7.87	—
R200MFG14	11.22	11.42	9.6	9.8	63.8	7.87	—
R200MFG15	11.42	11.62	9.8	10	65.02	7.87	—
R200MFG16	11.62	11.81	10	10.2	66.2	7.87	—
R200MFG17	11.81	12.01	10.2	10.4	67.43	7.87	—
R200MFG18	12.01	12.2	10.4	10.6	68.6	7.87	—
R200MFG19	12.2	12.4	10.6	10.8	69.83	7.87	—
R200MFG20	12.4	12.6	10.8	10.94	71	7.87	—
R200MFG20R	12.6	12.6	10.94	10.94	71	7.87	—
R200MFG30R	14.6	14.6	12.91	12.91	84.01	7.87	—

Manufacturer

ULMA
ARCHITECTURAL SOLUTIONS

Specification

ULMA ULM200 Polymer Concrete linear drainage channel
DUCTILE IRON EDGE
Load Class up to D400, EN 1433 Standard
Vertically and Horizontally channel aligning tongue and groove joints

DISCLAIMER - The customer and the customer's architects, engineers, consultants, and other professionals are completely responsible for the selection installation and maintenance of any product purchased from Trench Drain Supply and/or its manufacturers. TRENCH DRAIN SUPPLY MAKES NO WARRANTY, EXPRESS OR IMPLIED, AS TO THE SUITABILITY, DESIGN, MERCHANTIBILITY, OR FITNESS OF THE PRODUCT FOR CUSTOMERS APPLICATION. The drawing and information provided remain the property and copyright of the manufacturer listed. The manufacturer reserves the right to modify specification without notice.

1-877-903-7246

TRENCHDRAIN SUPPLY

www.trenchdrainsupply.com

Number

AR200MFG

Series

MULTIV 200

Ductile Iron edge Catch Basin

PART NUMBER	DIMENSIONS	
AR200MFG	21.7” [560MM]	

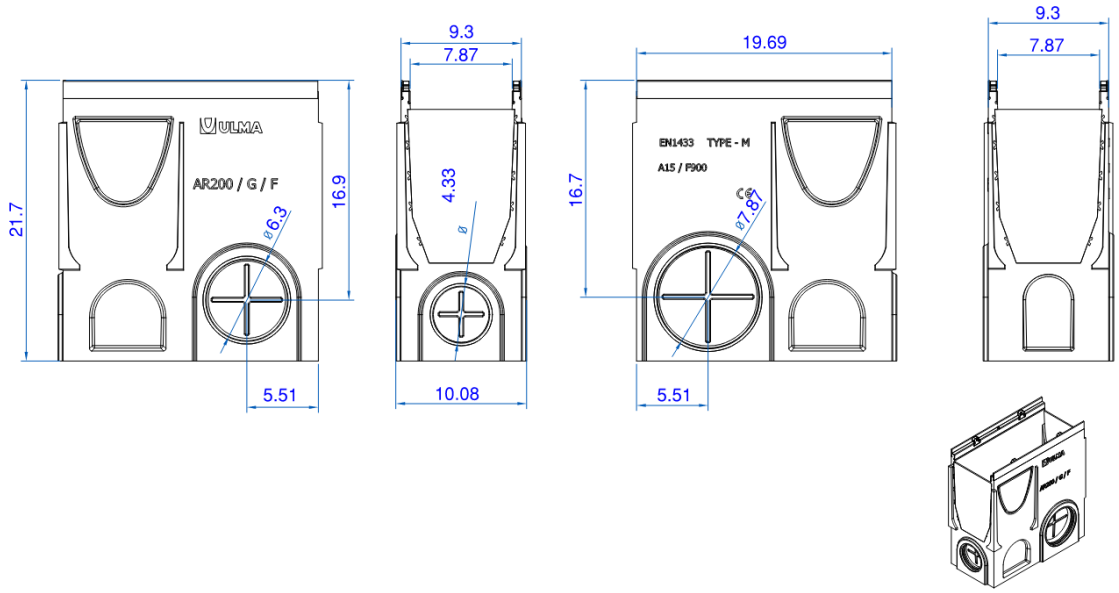

Manufacturer

ULMA
ARCHITECTURAL SOLUTIONS

Specification

ULMA AR200MFG DUCTILE IRON EDGE POLYMER CONCRETE CATCH BASIN
SUPPLIED BY TRENCH DRAIN SUPPLY

DISCLAIMER - The customer and the customer’s architects, engineers, consultants, and other professionals are completely responsible for the selection installation and maintenance of any product purchased from Trench Drain Supply and/or its manufacturers. TRENCH DRAIN SUPPLY MAKES NO WARRANTY, EXPRESS OR IMPLIED, AS TO THE SUITABILITY, DESIGN, MERCHANTIBILITY, OR FITNESS OF THE PRODUCT FOR CUSTOMERS APPLICATION. The drawing and information provided remain the property and copyright of the manufacturer listed. The manufacturer reserves the right to modify specification without notice.

Number	Series
MultiV200	**MultiV200** End Caps and Installation Device

End Outlet	Min Height (in)	Max Height (in)
TUNIR200GC-xx	6.7	14.6

Closed End cap	Min Height (in)	Max Height (in)
TUNIR200GA-xx	6.7	14.6

Composite End Cap	Min Height (in)	Max Height (in)
TUNIR200	6.7	14.6

ID200

Installation device for the MultiV200 Series trench drains

Manufacturer	Specification
ULMA ARCHITECTURAL SOLUTIONS	ULMA MultiV200 Accessories SUPPLIED BY TRENCH DRAIN SUPPLY

DISCLAIMER - The customer and the customer's architects, engineers, consultants, and other professionals are completely responsible for the selection installation and maintenance of any product purchased from Trench Drain Supply and/or its manufacturers. TRENCH DRAIN SUPPLY MAKES NO WARRANTY, EXPRESS OR IMPLIED, AS TO THE SUITABILITY, DESIGN, MERCHANTIBILITY, OR FITNESS OF THE PRODUCT FOR CUSTOMERS APPLICATION. The drawing and information provided remain the property and copyright of the manufacturer listed. The manufacturer reserves the right to modify specification without notice.

Number	Series
FNHX200RGEM	**MULTIV 200** E Ductile Cast Iron Slotted

PART NUMBER	DIMENSIONS	FREE AREA
FNHX200RGEM	19.6” [498MM]	0 SQ. IN.

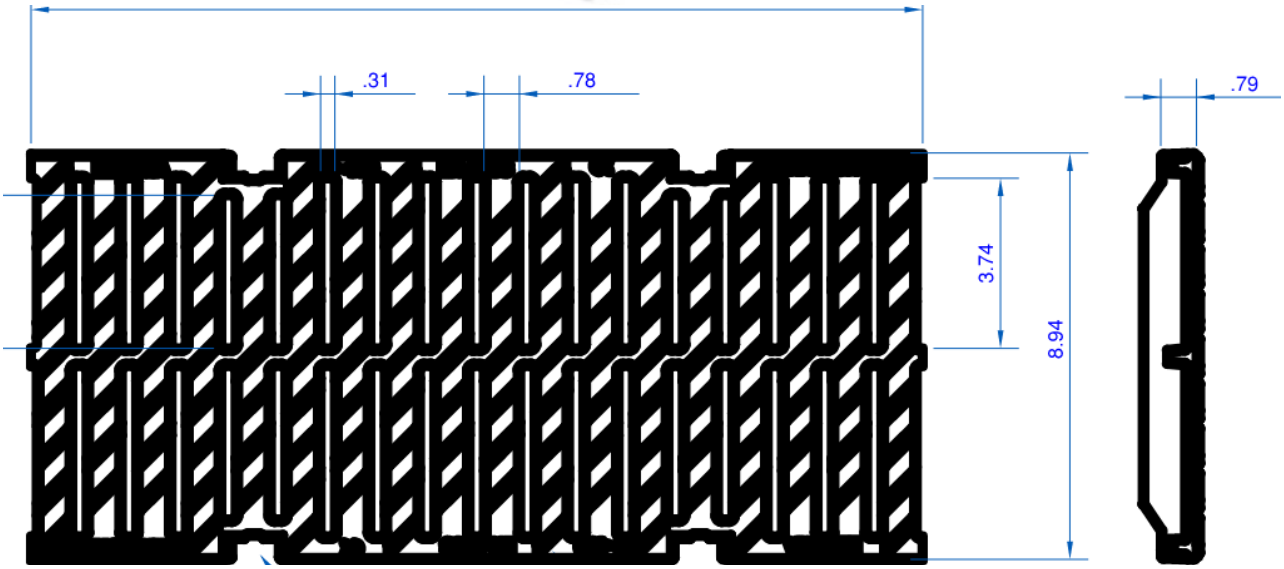

Manufacturer

ULMA
ARCHITECTURAL SOLUTIONS

Specification

ULMA FNHX200RGEM DUCTILE CAST IRON SLOTTED TRENCH DRAIN GRATE WITH CLASS E LOAD RATING (136,800 LBS.—5700 PSI),
SUPPLIED BY TRENCH DRAIN SUPPLY

DISCLAIMER - The customer and the customer’s architects, engineers, consultants, and other professionals are completely responsible for the selection installation and maintenance of any product purchased from Trench Drain Supply and/or its manufacturers. TRENCH DRAIN SUPPLY MAKES NO WARRANTY, EXPRESS OR IMPLIED, AS TO THE SUITABILITY, DESIGN, MERCHANTIBILITY, OR FITNESS OF THE PRODUCT FOR CUSTOMERS APPLICATION. The drawing and information provided remain the property and copyright of the manufacturer listed. The manufacturer reserves the right to modify specification without notice.

1-877-903-7246

TRENCHDRAIN SUPPLY

www.trenchdrainsupply.com

Number

FNHX200RGDM

Series

MULTIV 200

D Ductile Cast Iron Slotted

PART NUMBER	DIMENSIONS	FREE AREA
FNHX200RGDM	19.6” [498MM]	0 SQ. IN.

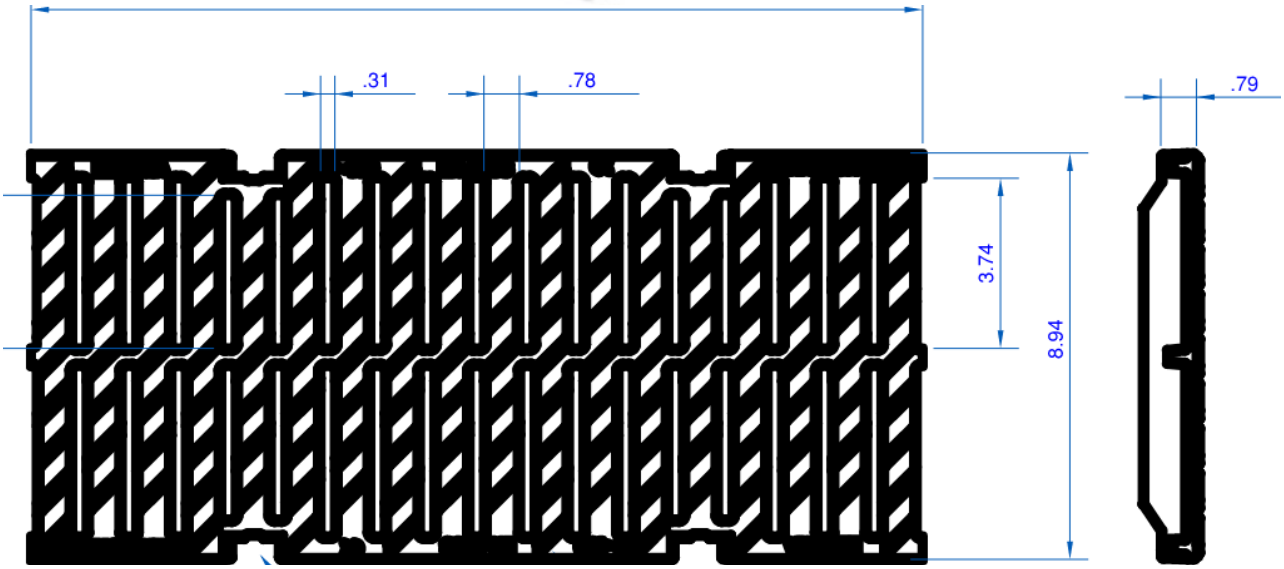

Manufacturer

ULMA ARCHITECTURAL SOLUTIONS

Specification

ULMA FNHX200RGDM DUCTILE CAST IRON SLOTTED TRENCH DRAIN GRATE WITH CLASS D LOAD RATING (89,920 LBS.—3746 PSI),
SUPPLIED BY TRENCH DRAIN SUPPLY

DISCLAIMER - The customer and the customer’s architects, engineers, consultants, and other professionals are completely responsible for the selection installation and maintenance of any product purchased from Trench Drain Supply and/or its manufacturers. TRENCH DRAIN SUPPLY MAKES NO WARRANTY, EXPRESS OR IMPLIED, AS TO THE SUITABILITY, DESIGN, MERCHANTIBILITY, OR FITNESS OF THE PRODUCT FOR CUSTOMERS APPLICATION. The drawing and information provided remain the property and copyright of the manufacturer listed. The manufacturer reserves the right to modify specification without notice.

Number	Series
FNLHX200RGDM	**MULTIV 200** D Ductile Cast Iron Slotted

PART NUMBER	DIMENSIONS	FREE AREA
FNLHX200RGDM	19.6” [498MM]	78.04 SQ. IN.

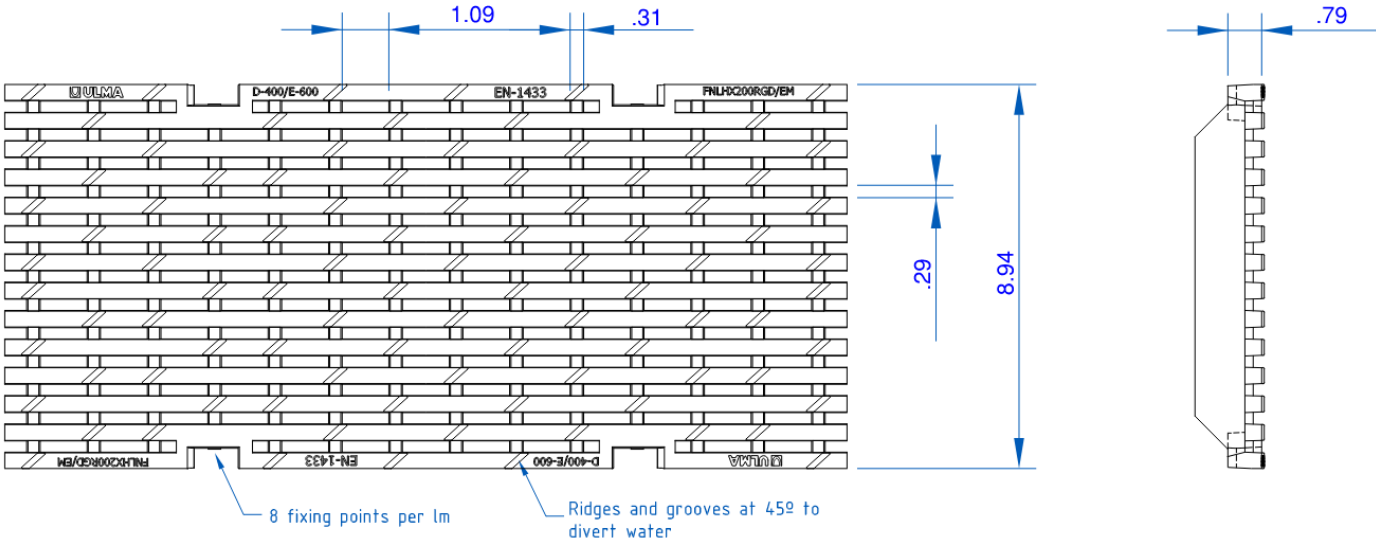

Manufacturer

ULMA
ARCHITECTURAL SOLUTIONS

Specification

ULMA FNHX200RGDM DUCTILE CAST IRON SLOTTED TRENCH DRAIN GRATE WITH CLASS D LOAD RATING (89,920 LBS.—3746 PSI),
SUPPLIED BY TRENCH DRAIN SUPPLY

DISCLAIMER - The customer and the customer’s architects, engineers, consultants, and other professionals are completely responsible for the selection installation and maintenance of any product purchased from Trench Drain Supply and/or its manufacturers. TRENCH DRAIN SUPPLY MAKES NO WARRANTY, EXPRESS OR IMPLIED, AS TO THE SUITABILITY, DESIGN, MERCHANTIBILITY, OR FITNESS OF THE PRODUCT FOR CUSTOMERS APPLICATION. The drawing and information provided remain the property and copyright of the manufacturer listed. The manufacturer reserves the right to modify specification without notice.